On interrelation between dynamics and topology of ambient manifold

V. Grines, Nizhny Novgorod, Russia

Goal of the lectures

The main goal is to present some results on interrelations between topology of M^3 and dynamics of Morse-Smale systems acting on it. We will give scetches of proofs of the statements below and discuss their applications.

Morse-Smale systems

Morse-Smale vector fields were introduced by S. Smale (in the paper "Morse inequality for Dynamical Systems" Bull. Amer. Math. Soc. 1960, No. 66, 46-49) as smooth vector fields X on smooth n-manifold M^n with following properties:

1. X has a finite number of hyperbolic singular points $\beta_1, \ldots, \beta_k$;
2. X has a finite number of hyperbolic closed orbits $\beta_{k+1}, \ldots, \beta_m$;
3. the stable and unstable manifolds of the β_i have transversal intersection with each other.

Morse-Smale diffeomorphisms

Let M^n is an orientable smooth closed manifold of dimension n.

Definition

Diffeomorphism $f : M^n \to M^n$ *is a Morse-Smale diffeomorphisms if:*

- *it's nonwandering set* $\Omega(f)$ *consists of finite number of hyperbolic periodic points,*
- *stable and unstable manifolds of different points from* $\Omega(f)$ *have transversal intersection.*

Heteroclinic intersections for n=3

Now suppose that $n = 3$ and $p, q \in \Omega(f)$ be saddle points.
A point $x \in W^u(p) \cap W^s(q)$ is called heteroclinic point if
$dim\ W^u(p) + dim\ W^s(q) = 3$.
If intersection $W^u(p) \cap W^s(q)$ is not empty and
$dim\ W^u(p) = dim\ W^s(q) = 2$ then each connected component of
$W^u(p) \cap W^s(q)$ is called heteroclinic curve.

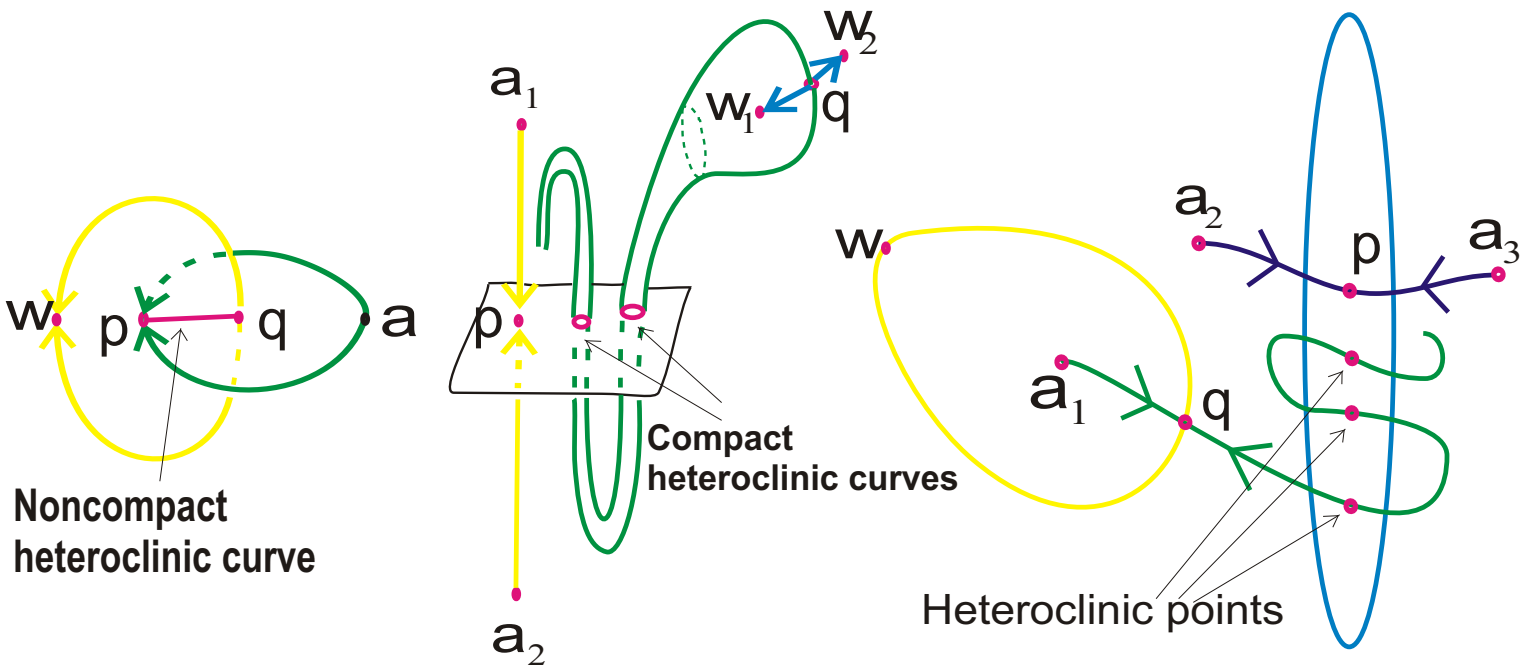

Gradient-like systems

Morse-Smale vector field is called gradient-like if it does not contain closed orbit.
Morse-Smale diffeomorphisms is called gradient-like if condition

$$W^u(p) \cap W^s(q) \neq \emptyset \text{ implies } \dim W^s(p) < \dim W^s(q)$$

Remark

When $n = 3$, a Morse-Smale diffeomorphism is gradient-like if and only if the two-dimensional and one-dimensional invariant manifolds of it's different saddle points do not intersect.
Let us emphasize that two-dimensional invariant manifolds of different saddle points of a gradient-like system may have a non empty intersection along heteroclinic curves.

Connected sum

A manifold M^3 is called connected sum of manifolds M_1^3 and M_2^3:

$$M^3 = M_1^3 \sharp M_2^3$$

if M^3 is obtained by choosing 3-balls $B_1 \subset M_1$ and $B_2 \subset M_2$ and by gluing the manifolds $M_1 \setminus B_1$ and $M_2 \setminus B_2$ by a diffeomorphism between the boundaries which reverses the natural orientation on the boundaries.

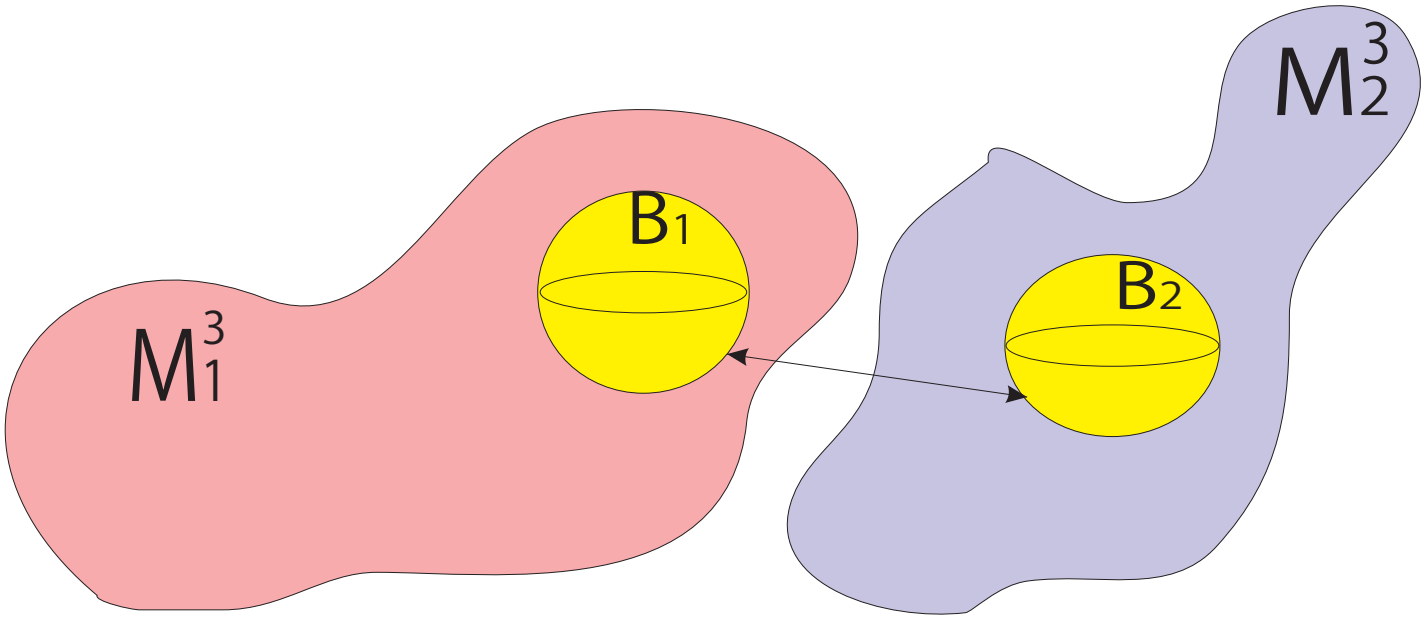

Decomposition Theorem

A manifold M^3 is called irreducible if any 2-dimensional sphere regularly embedded in M^3 bounds 3-dimensional disk.
The manifold M^3 is said simple if M^3 is closed and if M^3 is either irreducible or homeomorphic to $S^2 \times S^1$.

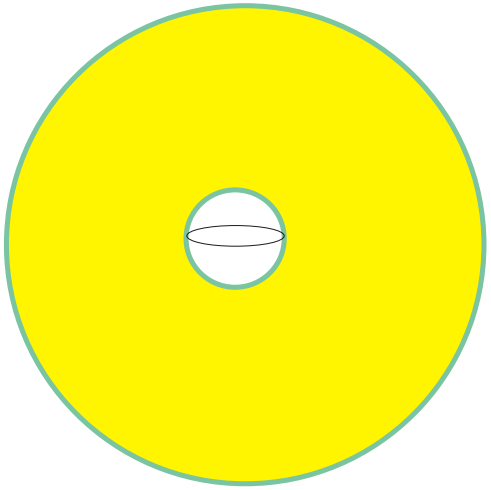

Kneser, Milnor

Any orientable closed manifold M^3 can be decomposed into the connected sum of simple manifolds and the decomposition is unique.

Topology of ambient manifold addmitting Morse-Smale diffeomorphisms without heteroclinic curves

Let M^3 be a three-dimensional closed, connected, orientable manifold. Set

$$g = \frac{k - \ell + 2}{2},$$

where k is the number of saddles and ℓ is the number of sinks and sources of gradient-like flow (Morse-Smale diffeomorphisms) given on M^3.

Theorem (Ch. Bonatti, V.Grines, V. Medvedev, E. Pécou.)

There exists a gradient-like flow (Morse-Smale diffeomorphism) without heteroclinic trajectories (curves) on M^3 if and only if M^3 is the sphere S^3 and $k = \ell - 2$, or M^3 is the connected sum of g copies of $S^2 \times S^1$.

Application

The theorem above is sufficient condition of existence of a heteroclinic curve for given Morse-Smale diffeomorphism.

- For example, if $\Omega(f)$ of diffeomorphism $f : S^3 \to S^3$ consists of two saddles, one sink and one source then wandering set of such diffeomorphism contains a heteroclinic curve. Moreover, in this case there is at least one noncompact heteroclinic curve.
- If ambient manifold of Morse-Smale diffeomorphism f is not homeomorphic to the connected some of copies of $S^2 \times S^1$ (for example if ambient manifold is the torus T^3) then $\Omega(f)$ contains at least one heteroclinic curve.

V. Grines , T. Medvedev, O. Pochinka, E. Zhuzhoma. On heteroclinic separators of magnetic fields in electrically conducting fluids, Physica D: Nonlinear Phenomena. Vol. 294 (2015), 1-5.

On existence of two-dimensional invariant manifold without heteroclinic points

Lemma

Let wandering set of gradient-like flow (Morse-Smale diffeomorphism) on M^3 does not contain heteroclinic curve. Then there is a saddle periodic point $p \in \Omega(f)$ such that either $W^u(p)$ or $W^s(p)$ has dimension 2 and does not contain heteroclinic points.

If we suppose the contrary we come to the contradiction with finiteness of the nonwandering set $\Omega(f)$.

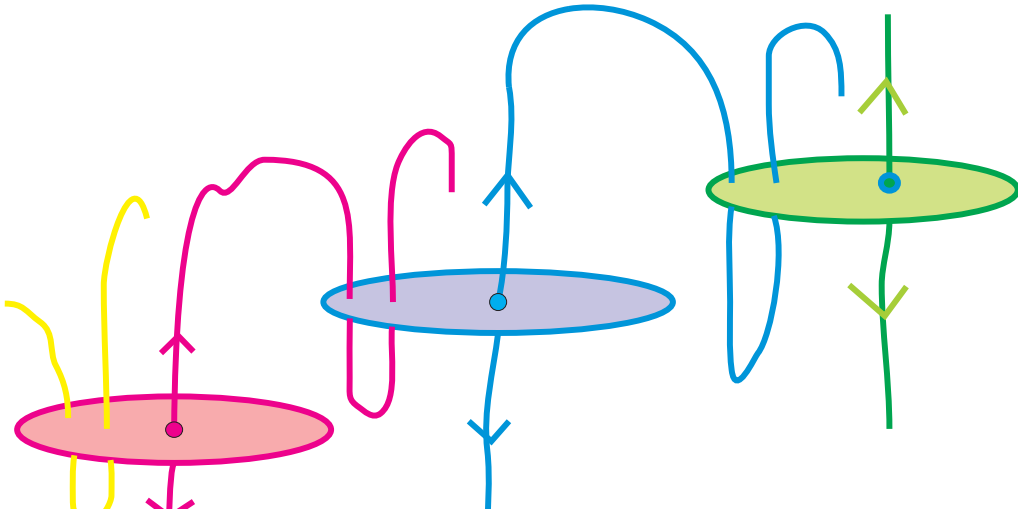

On existence of invariant sphere which is smooth everywhere except one source or sink

Suppose for definiteness that there is point $p \in \Omega(f)$ such that $W^s(p)$ has dimension 2 and does not contain heteroclinic points. As by assumption $W^s(p)$ does not contain heteroclinic curves then by S. Smale there is a source $\alpha \in \Omega(f)$ such that $\Sigma = W^s(p) \cup \{\alpha\}$ is homeomorphic to the sphere S^2.

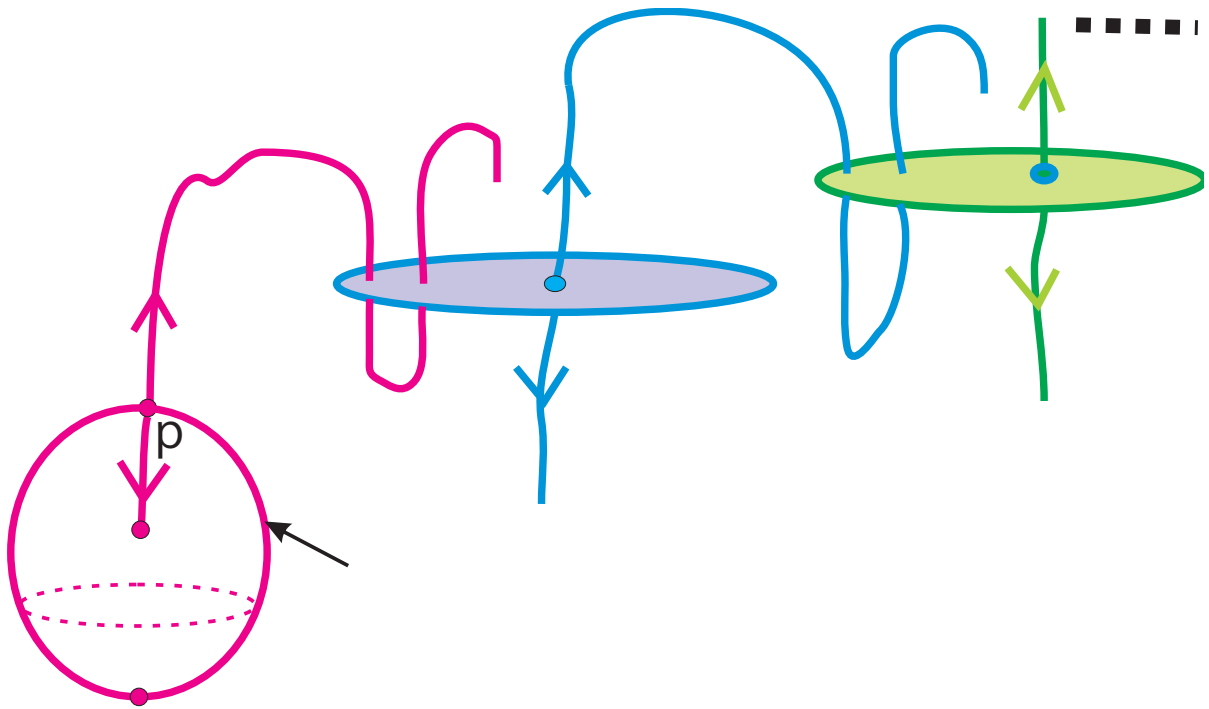

On existence of f^{-m}-compressed smooth anulus

Lemma

There is an open domain K such that:

- $\Sigma \subset K$;
- $\overline{K} = K \cup S_1^2 \cup S_2^2$;
- $\overline{K}$ *is diffeomorphic to* $S^2 \times [0,1]$;
- *There is* $m > 0$ *such that* $f^{-m}(\overline{K}) \subset K$.

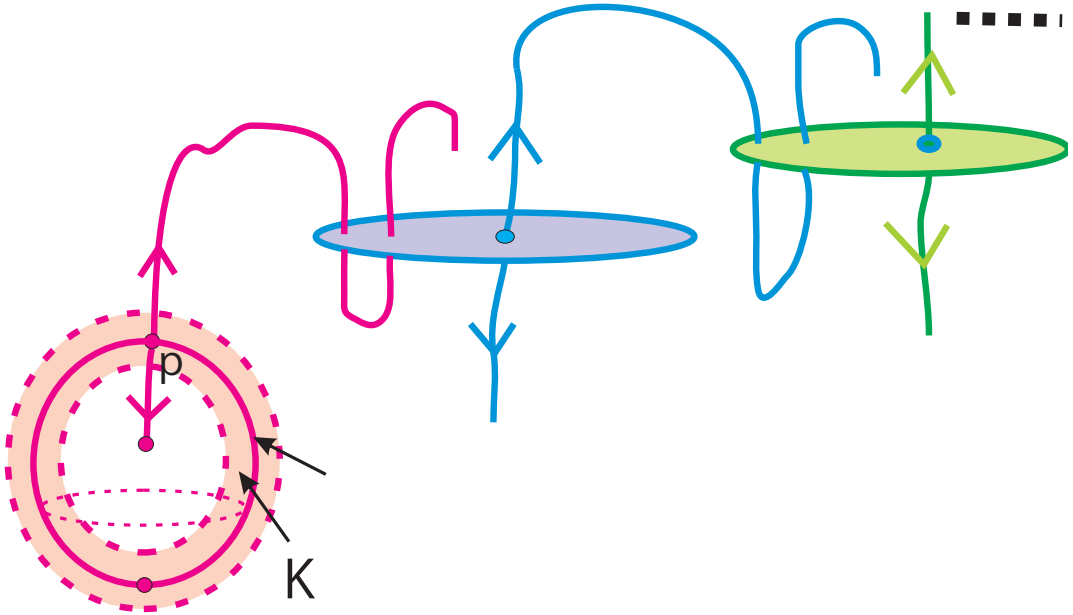

Pixton example with wild separatrices (1977) Knot invariants by Bonatti-Grines (2000)

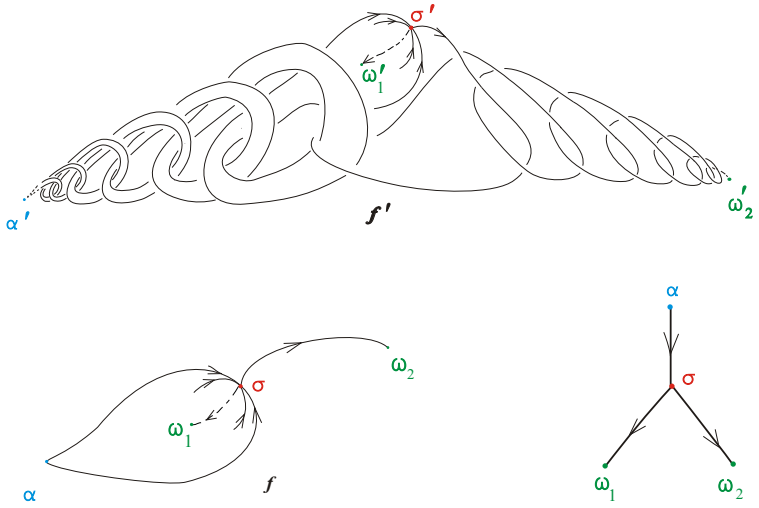

$f, f' : \mathbb{S}^3 \to \mathbb{S}^3$ have isomorphic graphs and don't topologically conjugated, because separatrices of σ' are wild. There are series results obtained by C. Bonatti, V. Grines, V. Medvedev, E. Pécou and O. Pochinka in (2000-2010) on classification of Morse-Smale diffeomorphisms under suggestions of different generality. O. Pochinka got complete classification of arbitrary 3D-Morse-Smale diffeomorphisms in 2011.

On existence a “good” neighborhood for a sphere smooth everywhere except one point

Lemma

Let $\eta : S^2 \to M^3$ *be a topological embedding which is a smooth everywhere except at one point and let* $\Sigma = \eta(S^2)$*. Then any neighborhood of* Σ *contains a subneighborhood* K *which is diffeomorphic to* $S^2 \times [0, 1]$*.*

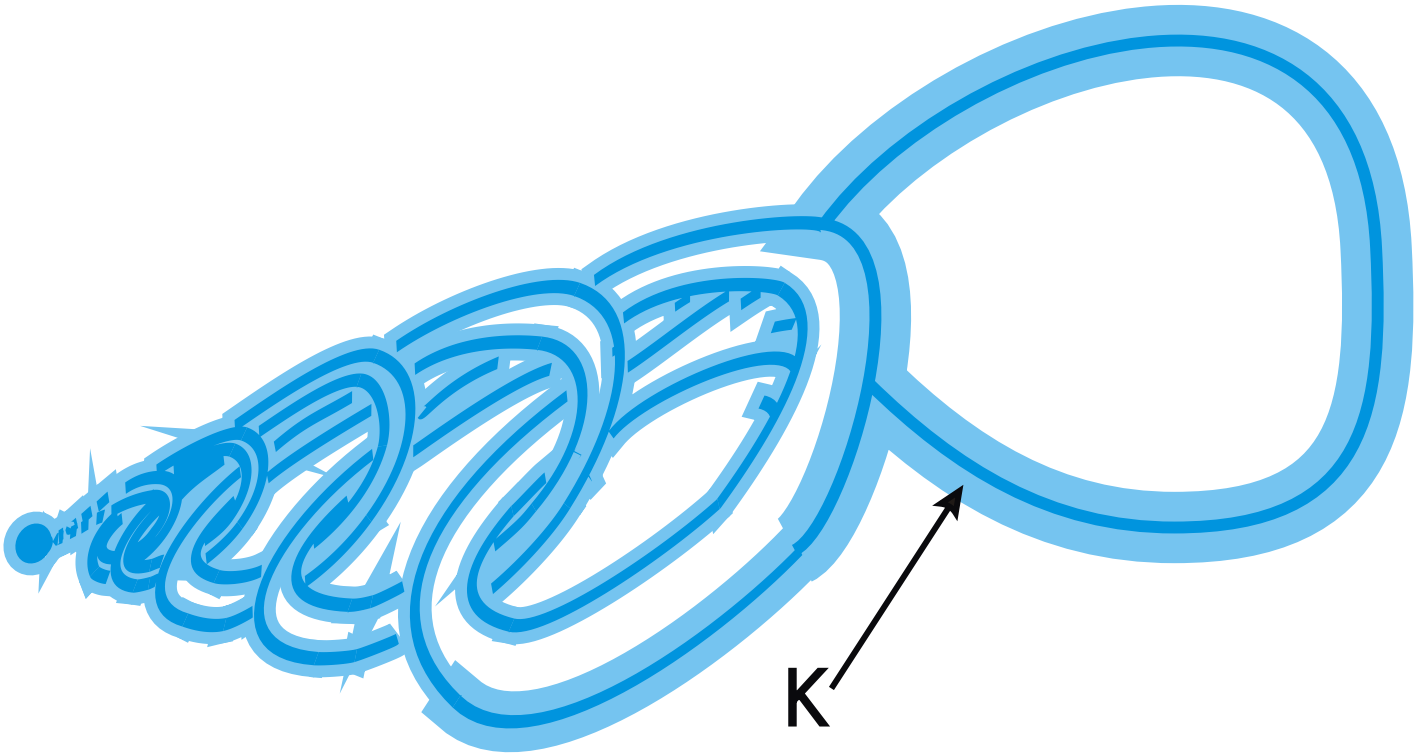

A sphere smooth everywhere except two points

Remark

If $\eta : S^2 \to M^3$ *be a topological embedding which is a smooth everywhere except at least two points then lemma above is not true in general and consequently it is non trivial topological fact.*

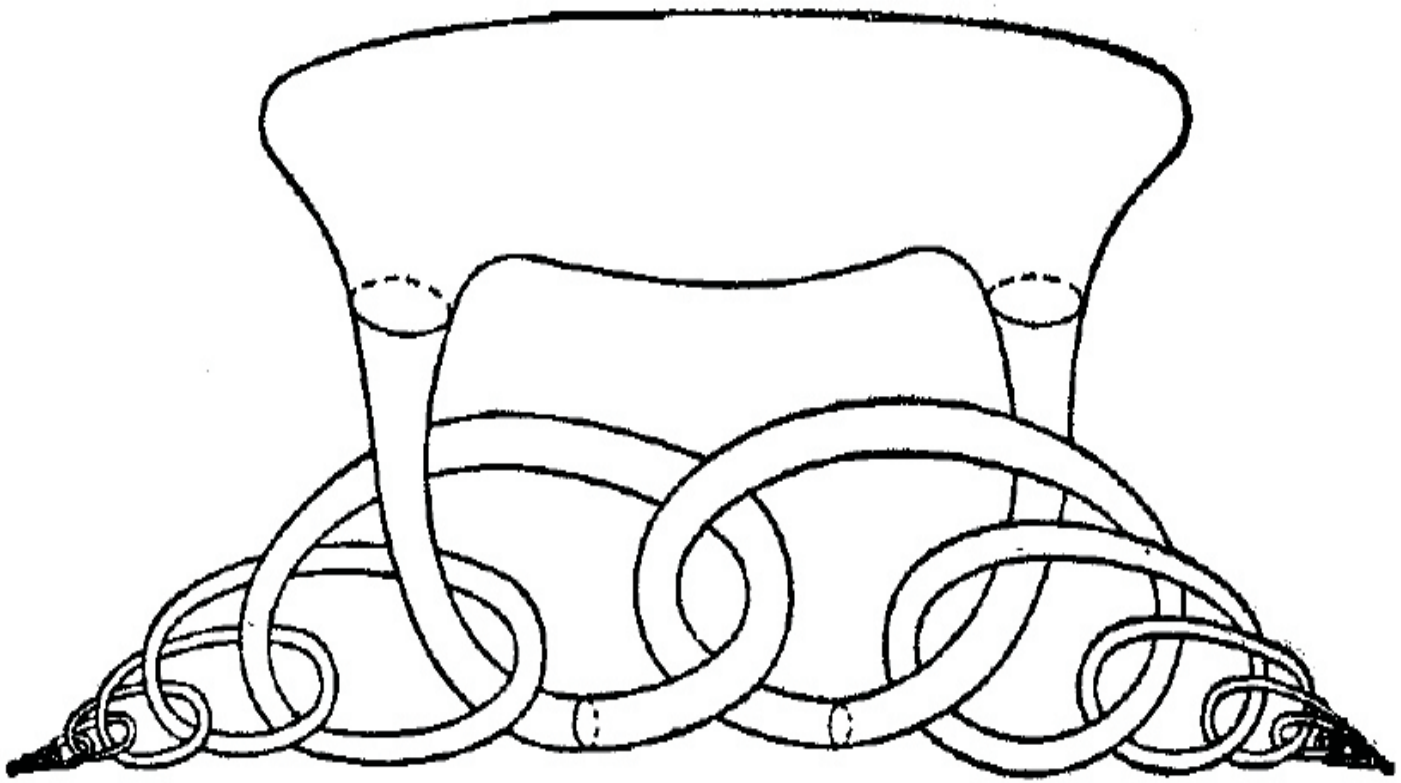

Cut and glue operations. Finding of a copy $S^2 \times S^1$

The boundary of $M^3 \setminus K$ consists of two connected components diffeomorphic to the sphere S^2. Let us glue to these connected components the boundaries of smooth 3-balls and denote by $\tilde{M}^3$ new manifold. There are two possibilities:

1) $\tilde{M}^3$ is connected and in this case M^3 is homeomorphic to $\tilde{M}^3 \sharp (S^2 \times S^1)$;

2) $\tilde{M}^3$ consists of two connected component $\tilde{M}^3_1$, $\tilde{M}^3_2$ and in this case M^3 is homeomorphic to $\tilde{M}^3_1 \sharp \tilde{M}^3_2$.

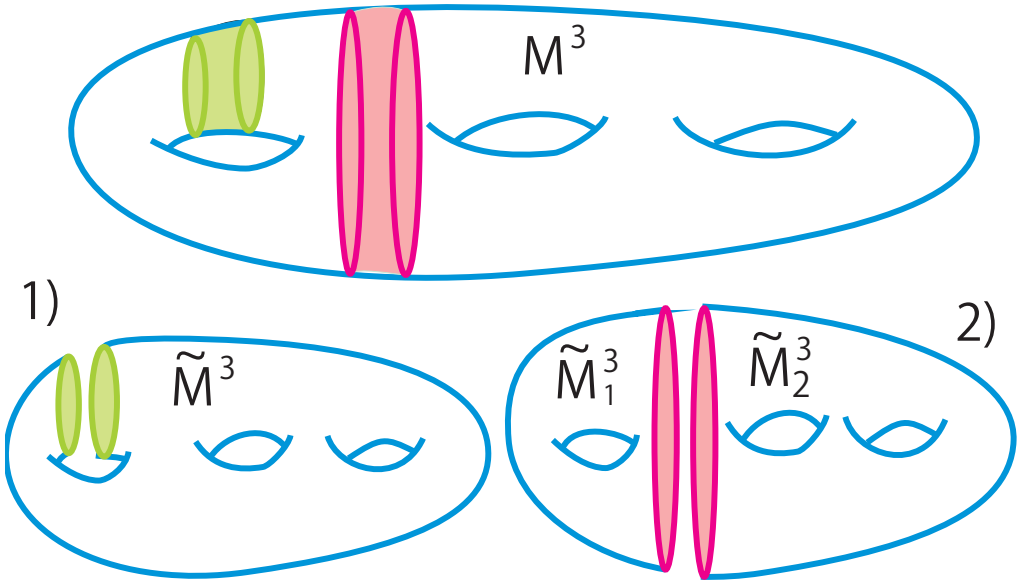

Construction of new Morse-Smale diffeomorphism without one saddle point

Without lost of generality we can suppose that $\Omega(f)$ consists of fixed points.

In both cases above one can construct a Morse-Smale diffeomorphism $\tilde{f} : \tilde{M}^3 \to \tilde{M}^3$ whose nonwandering set contains $k-1$ saddle fixed points and $\ell+1$ sinks and sources.

Let us continue the process of cutting of the manifold $\tilde{M}^3$ and then cutting of the manifold that we will get and so on.

Two kinds of saddles

- Let g be number of saddles for which closer of two-dimensional unstable or stable manifold does not cut appropriate manifold on two connected components.

  In this case after cutting of anulus neighborhood and gluing balls we find a copy of $S^2 \times S^1$ in decomposition of manifold M^3.

- Then $k - g$ is the number of saddles whose closer of two-dimensional unstable or stable manifold cuts appropriate manifold on two connected components.

Calculation of the number of saddles which define all copies $S^2 \times S^1$ in decomposition M^3

After all cuts we get the manifold which admits Morse-Smale diffeomorphism whose nonwandering set consists of only sinks and sources. Consequently this manifold is the union of $k - g + 1$ copies of 3-spheres. As each sphere contains exactly one sink and one source we get $k - g + 1 = \frac{k+\ell}{2}$.
It follows from this equation that

$$g = \frac{k - \ell + 2}{2}$$

and consequently M^3 is the connected sum of $g = \frac{k-\ell+2}{2}$ copies of $S^2 \times S^1$. That is the theorem is proved.

Existence Lemma

Lemma

Let g be non negative integer, and let M^3 be the 3-sphere if $g = 0$, or the connected sum of g copies of $\mathbb{S}^2 \times \mathbb{S}^1$ if $g > 0$. Then for any non-negative integers r and l such that $r = \ell + 2g - 2$, there exists a Morse-Smale vectorfield without heteroclinic curve and without periodic trajectories on M^3 admitting r saddle points and l sinks and sources.

Sketch of a proof. The case of the sphere

First consider the case of the sphere:
take any non-negative integer r and set $r = k + 2$. There is a Morse-Smale flow X_0 on the compact 3-ball B pointing inward transversally to the sphere $S = \partial B$ and having exactly $k + 1$ sinks and k saddles having a 2-dimensional stable manifold (and no periodic orbit): the attracting set in the ball B is a smooth compact arc formed by the sinks and by the unstable manifolds of the saddle points.

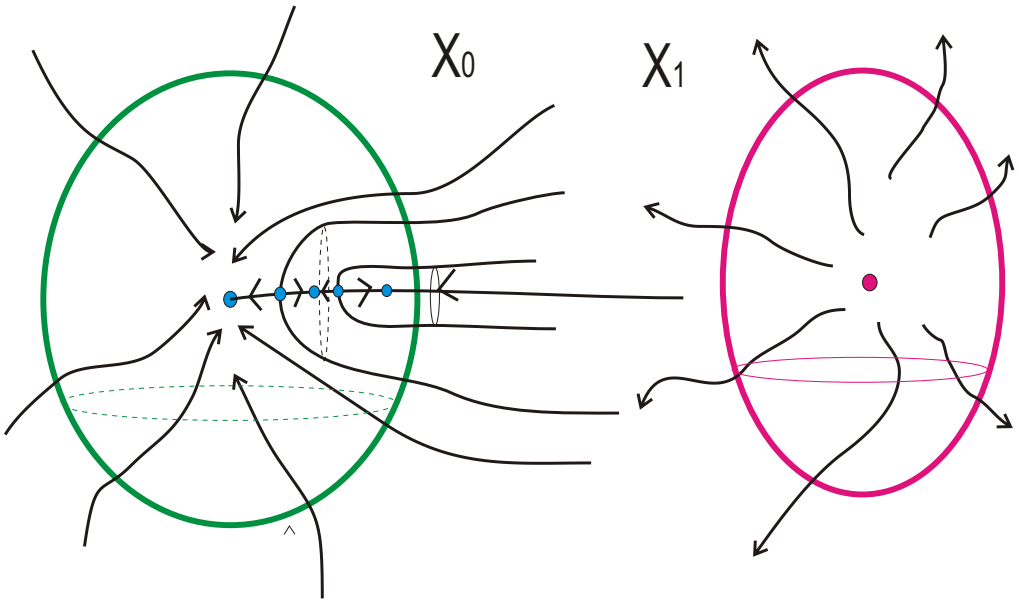

The case of the sphere

Denote by X_1 a flow on the ball B pointing outward transversally to S and having a unique source inside B (and no periodic orbit). By gluing two copies of the ball B one endowed with X_0 and the other endowed with X_1 we get the 3-sphere S^3 with a Morse-Smale vectorfield without heteroclinic curves and without periodic trajectories and having exactly l sources and sinks and r saddles.

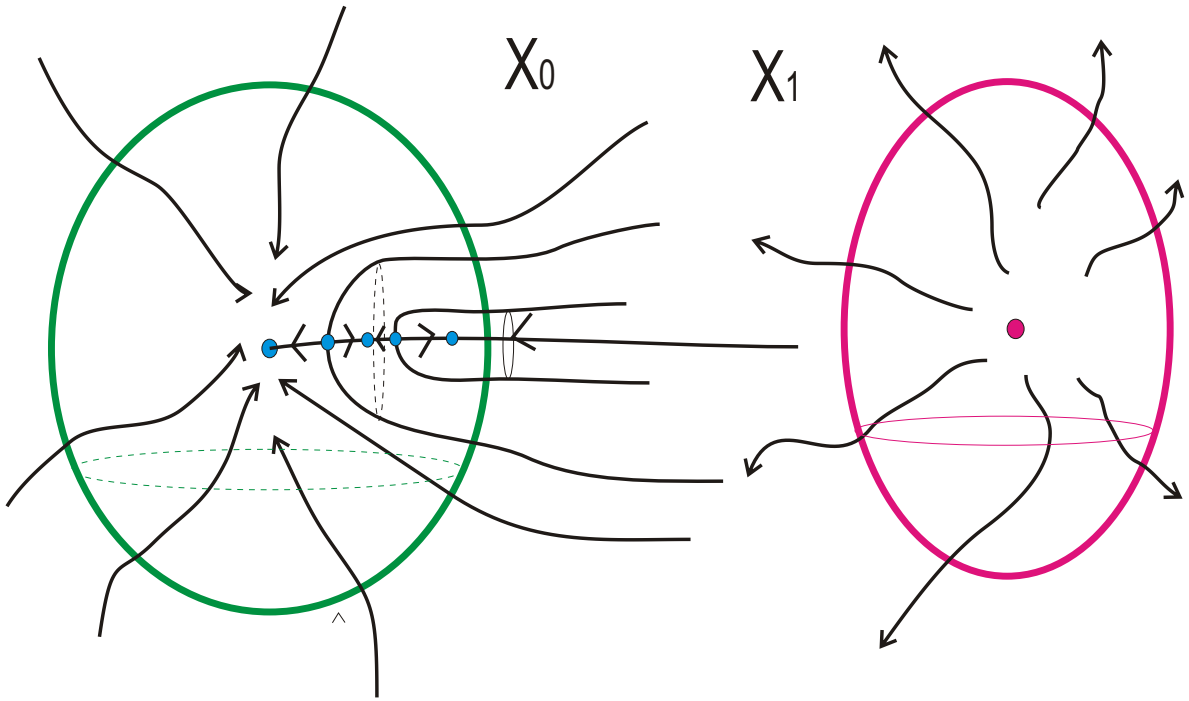

Handlebodies

A three-dimensional orientable manifold is called a handlebody of a genus $g \geq 0$ if it is obtained from a 3-ball by an orientation reversing identification of g pairs of pairwise disjoint 2-discs in its boundary.
The boundary of such a handlebody is an orientable surface of genus g.

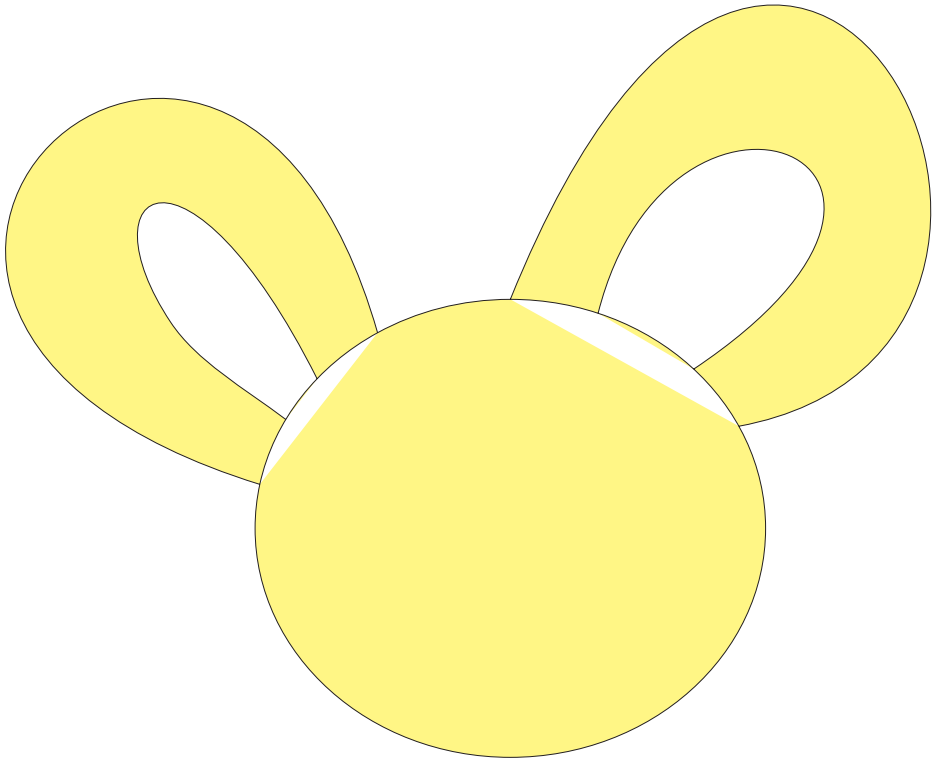

Handlebodies

A three-dimensional orientable manifold is called a handlebody of a genus $g \geq 0$ if it is obtained from a 3-ball by an orientation reversing identification of g pairs of pairwise disjoint 2-discs in its boundary.
The boundary of such a handlebody is an orientable surface of genus g.

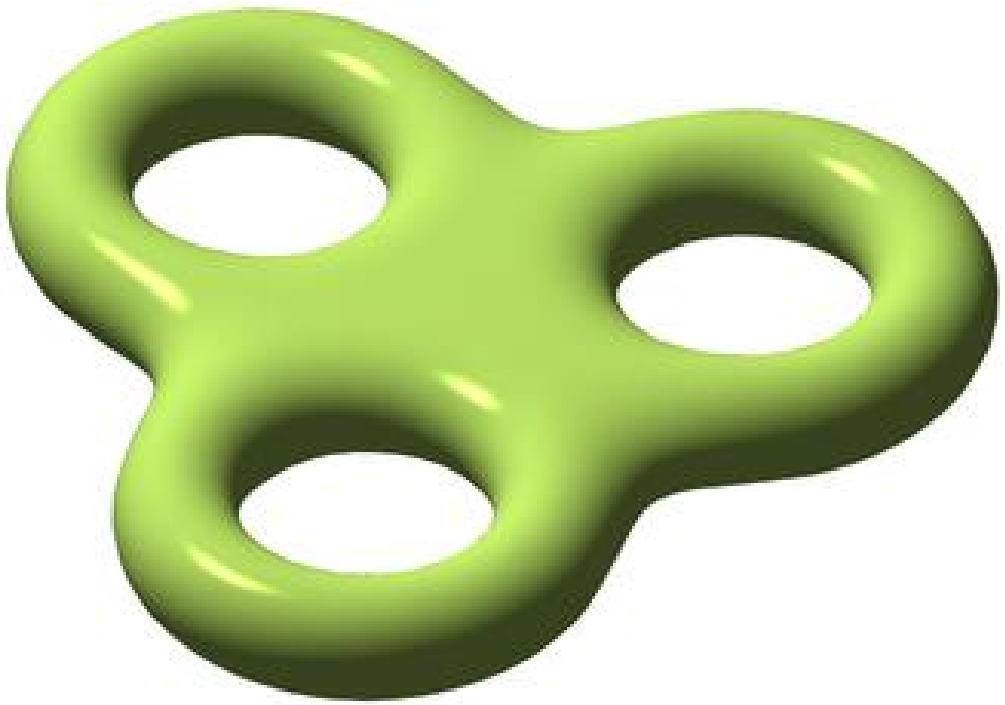

The case when M^3 is the connected sum of $g > 0$ copies of $\mathbb{S}^2 \times \mathbb{S}^1$

Notice that M^3 is obtained by gluing two copies of the handlebody B_g of genus g by a diffeomorphism of its boundary $S_g = \partial B_g$ which is isotopic to identity.

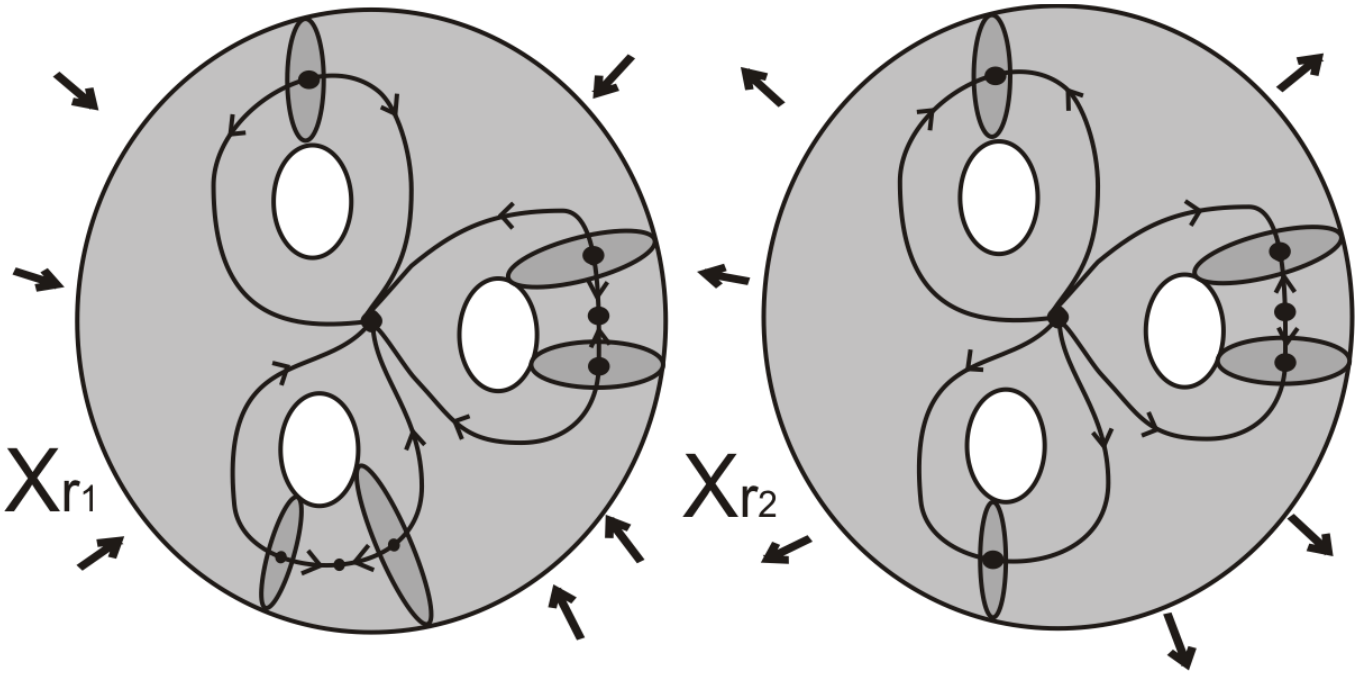

Choose disjoint discs $d_1, \ldots, d_g$ which are transversal to the boundary B_g and such that B_g minus union of all disks will be homeomorphic to 3-ball. Denote by γ_i the boundary of d_i. As $g = \frac{r-\ell+2}{2}$ and $\ell \geq 2$ then $r \geq 2g$. Represent $r = r_1 + r_2$ where $r_j \geq g, j = 1, 2$. Construct vectorfields X_{r_1} , X_{r_2} such that:

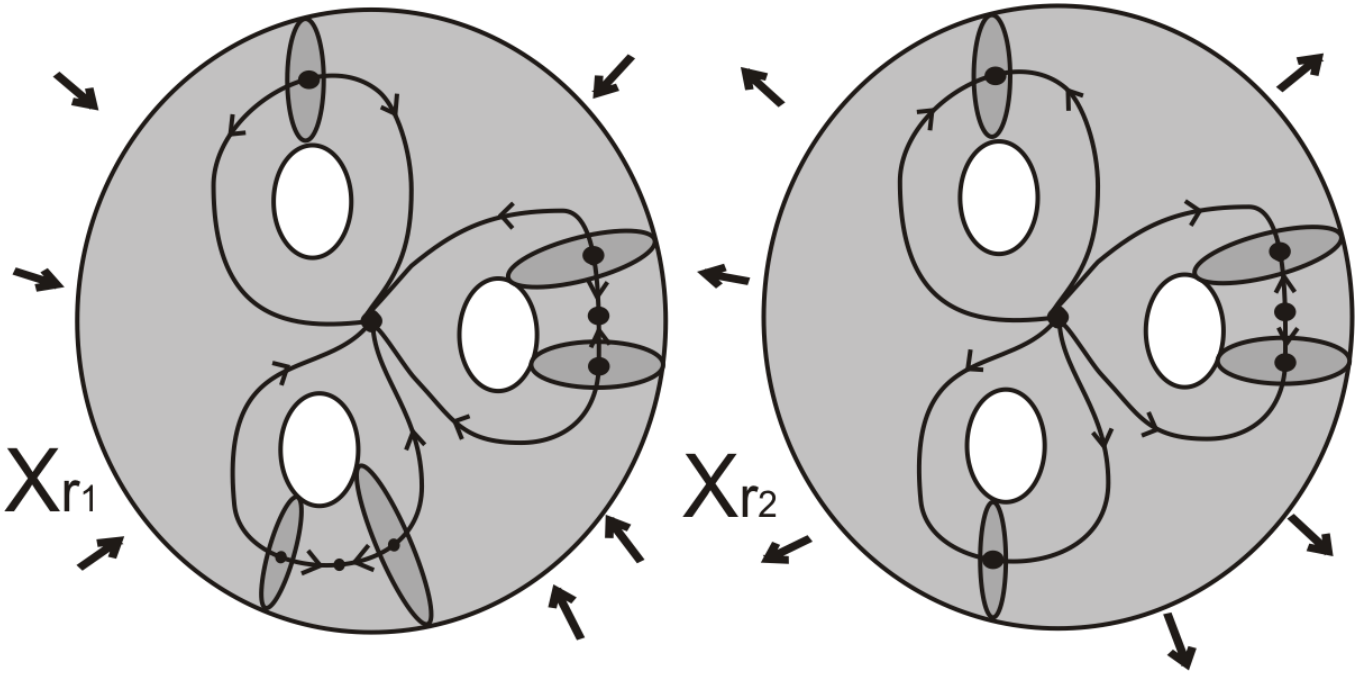

1) X_{r_1} (X_{r_2}) is pointing inward (outward) transversally to S_g;
2) X_{r_1} (X_{r_2}) has exactly r saddles and $r_1 - g + 1$ sinks ($r_2 - g + 1$ sourses) and has no periodic trajectories;
3) for any saddle σ of X_{r_1} (X_{r_2}) stable manifold W^s_σ (unstable manifold W^u_σ) is compact disk tranversal to S_g and $W^s_\sigma \cup S_g$ ($W^u_\sigma \cup S_g$) is closed curve which is homotopic to one curves γ_i;
4) for any i there is saddle σ of X_{r_1} (X_{r_2} such that $W^s_{\sigma_i} \cup S_g$ ($W^u_{\sigma_i} \cup S_g$) is homotopic to γ_i

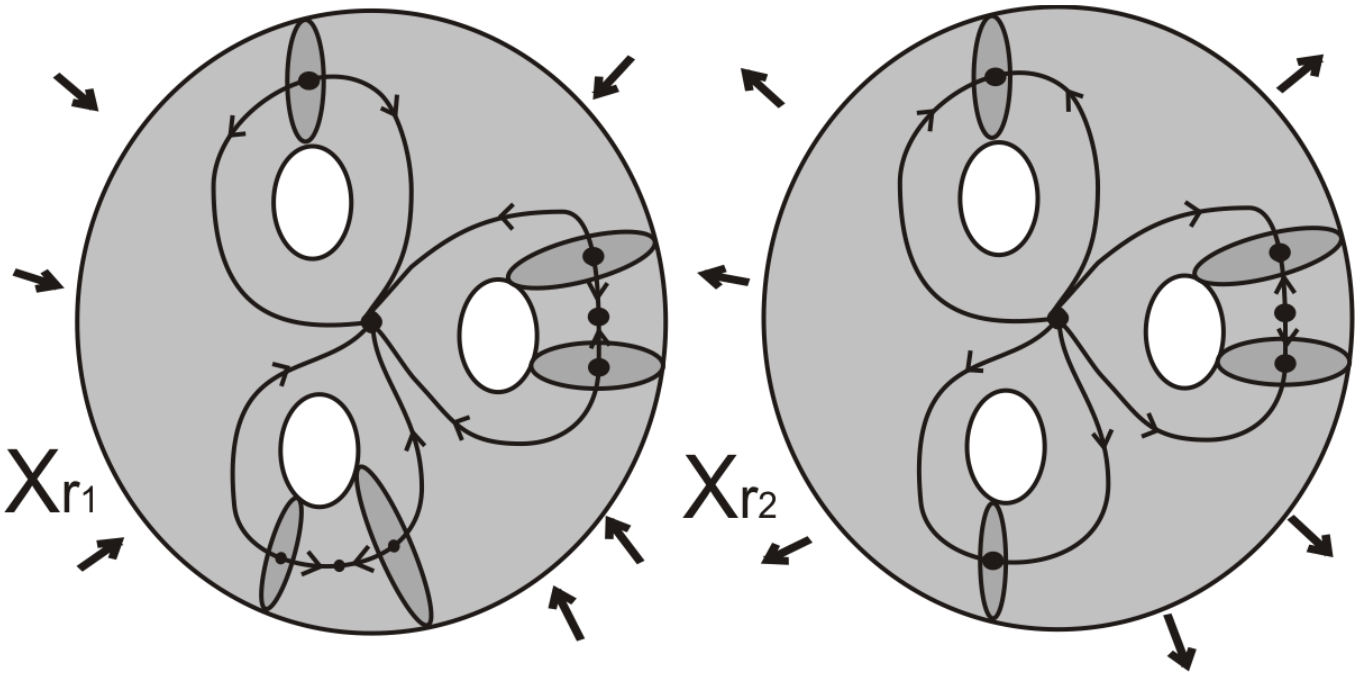

A gluing of attracting and repelling vector fields

Finally we glue the vectorfield X_{r_1} with the vectorfield X_{r_2} using a diffeomorphism ϕ and we get a Morse-Smale vectorfield X without heteroclinic curves and without periodic orbits on a closed 3-manifold diffeomorphic to M^3.

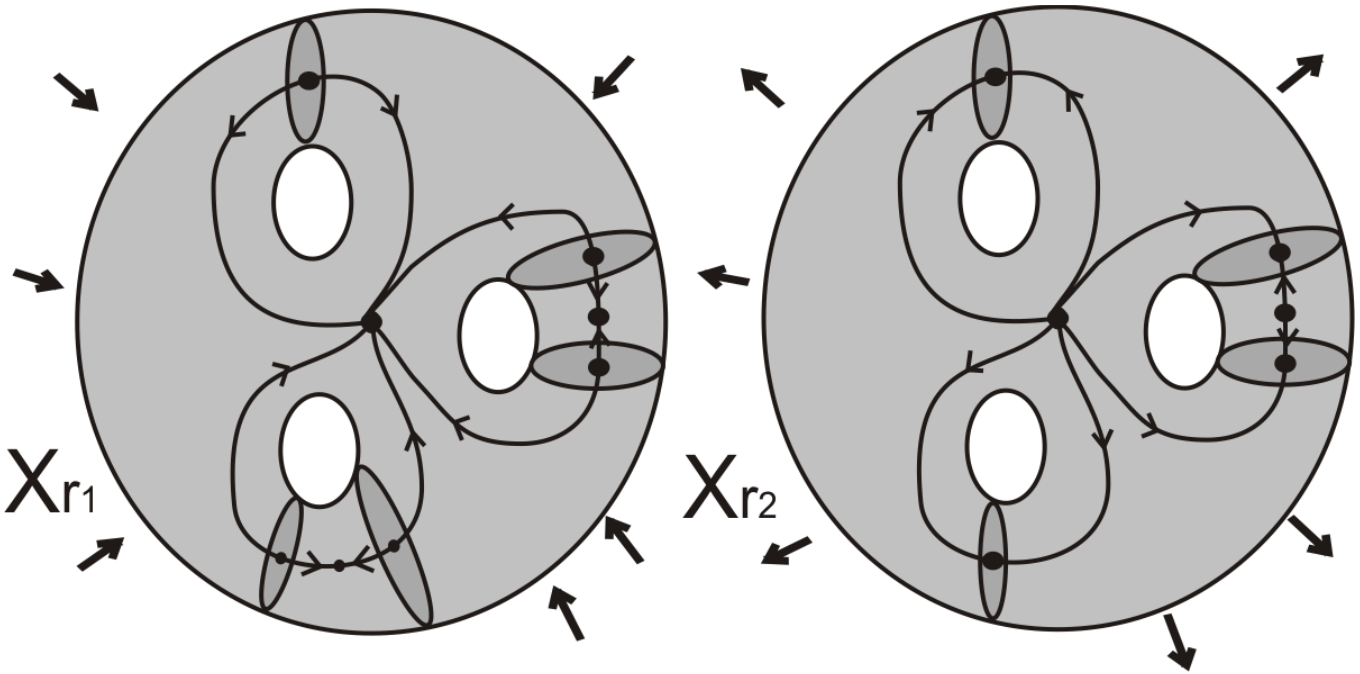

Moreover X has exactly r_1 saddles with 2-dimensional stable manifolds, r_2 saddles with 1-dimensional stable manifolds, $l_1 = k_1 - g + 1$ sinks and $l_2 = k_2 - g + 1$ sources.

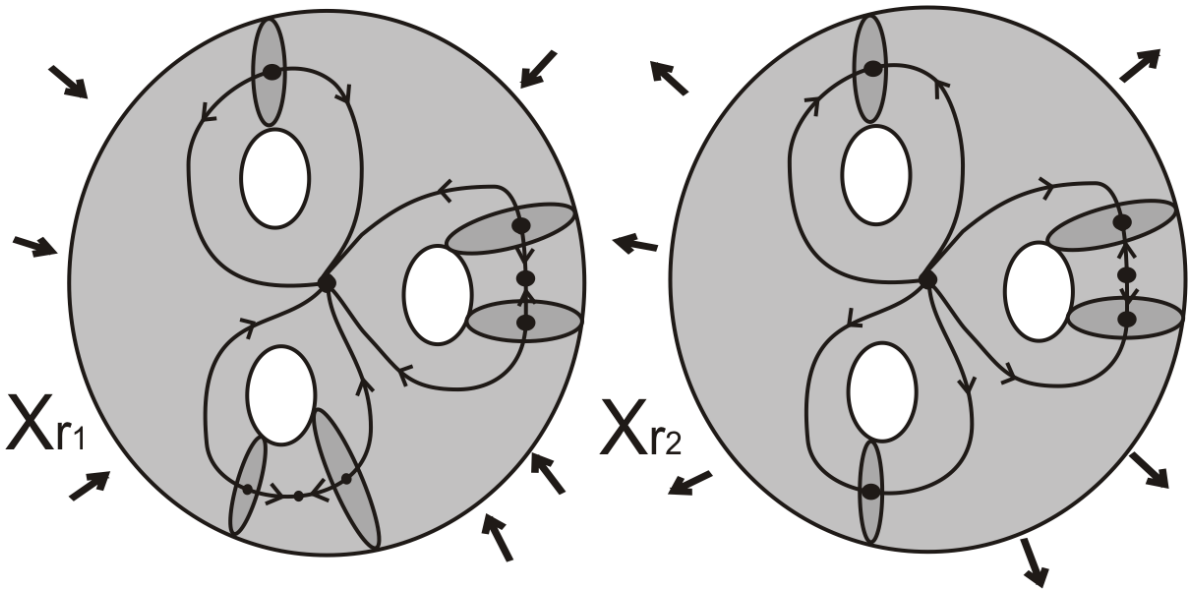

Topology of ambient manifold M^3 addmitting gradient-like flows and diffeomorphisms

Let

$$g = \frac{k - \ell + 2}{2},$$

where k is the number of saddles and ℓ is the number of sinks and sources of gradient-like flow (diffeomorphisms) given on M^3.

Theorem (V. Grines, V. Medvedev, E. Zhuzhoma)

If M^3 admits gradient-like flow (diffeomorphism with tame bunches of one-dimensional separatrices of saddles) then the manifold M^3 admits the Heegaard spliting of genus g.

Handlebodies

A three-dimensional orientable manifold is called a handlebody of a genus $g \geq 0$ if it is obtained from a 3-ball by an orientation reversing identification of g pairs of pairwise disjoint 2-discs in its boundary.
The boundary of such a handlebody is an orientable surface of genus g.

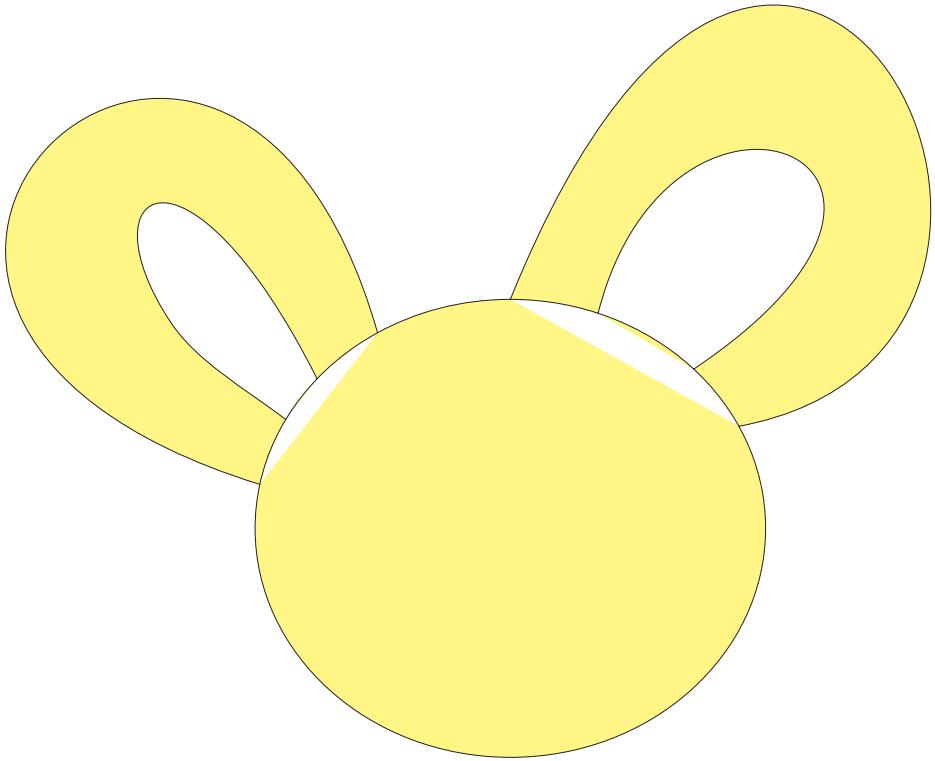

Handlebodies

A three-dimensional orientable manifold is called a handlebody of a genus $g \geq 0$ if it is obtained from a 3-ball by an orientation reversing identification of g pairs of pairwise disjoint 2-discs in its boundary.
The boundary of such a handlebody is an orientable surface of genus g.

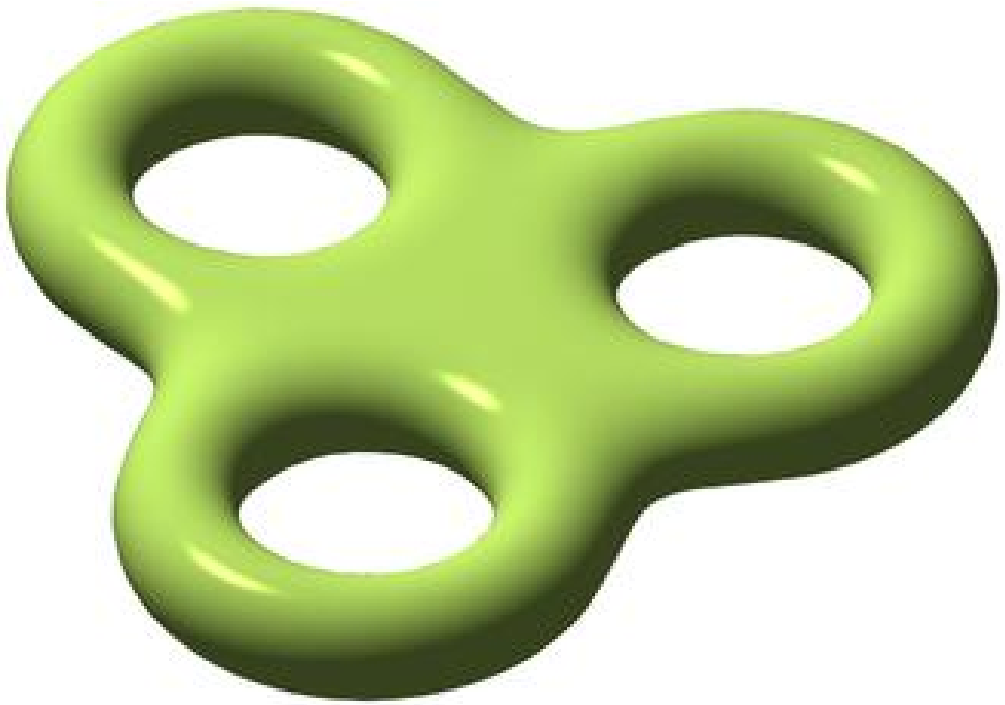

Heegaard spliting

A Heegaard splitting of genus $g \geq 0$ for a manifold M^3 is a representation of M^3 as the gluing of two handlebodies of genus g by means of some diffeomorphism of their boundaries. Their common boundary after gluing, a surface of genus g in M^3, is called a Heegaard surface.

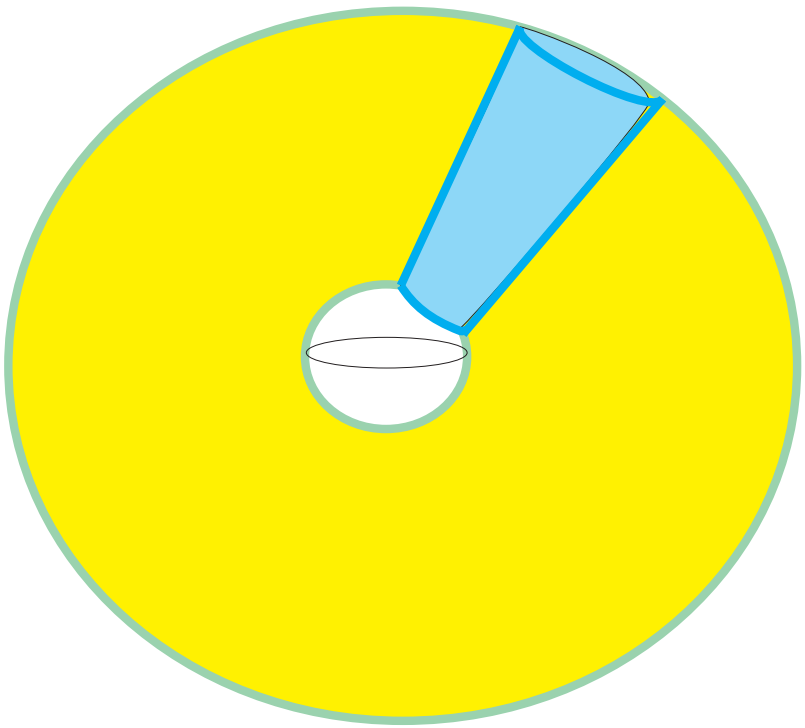

Heegaard spliting

Let V and W be handlebodies of genus g, and let f be an orientation reversing homeomorphism from the boundary of V to the boundary of W. By gluing V to W along f we obtain the closed oriented 3-manifold $M^3 = V \cup_f W$.
The decomposition of M^3. into two handlebodies is called a Heegaard splitting, and their common boundary S_g is called the Heegaard surface of the splitting.
A Heegaard splitting is minimal or minimal genus if there is no other splitting of the ambient three-manifold of lower genus.
The minimal value g of the splitting surface is the Heegaard genus of M^3. We denote this number $G(M)$ ($g \geq G(M)$).

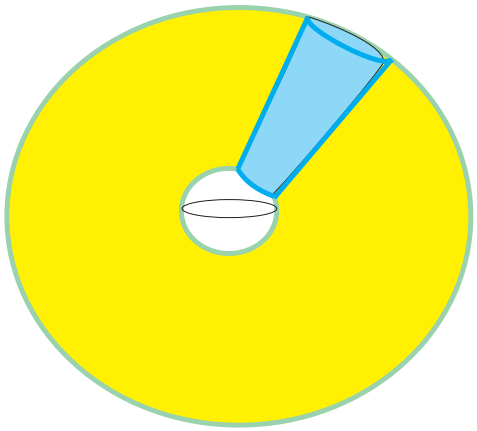

Topology of ambient manifold M^3 addmitting gradient-like flows and diffeomorphisms

Let

$$g = \frac{k - \ell + 2}{2},$$

where k is the number of saddles and ℓ is the number of sinks and sources of gradient-like flow (diffeomorphisms) given on M^3.

Theorem (V. Grines, V. Medvedev, E. Zhuzhoma)

If M^3 admits gradient-like flow (diffeomorphism with tame bunches of one-dimensional separatrices of saddles) then the manifold M^3 admits the Heegaard spliting of genus g.

Application for finding of closed trajectories of Morse-Smale flows on M^3

Let f^t be Morse-Smale flow on M^3 with

$$g = \frac{k - \ell + 2}{2}$$

and $G(M) > g$ then f^t has at least one closed trajectori.

Bunches of separatrices

Let $f : M^3 \to M^3$ be a gradient-like diffeomorphism and $L(\omega)$ be the bunch of all unstable one-dimensional separatrices of saddles which contain ω in their closure.

A bunch $L(\omega)$ is called tame if there is a homeomorphism $\psi : W^s(\omega) \to \mathbb{R}^3$ such that $\psi(\omega) = O$, where O is the origin and $\varphi(\bar{\ell} \setminus \sigma)$ is a ray starting from O for any separatrix $\ell \in L(\omega)$. In the opposite case the set $L(\omega)$ is wild.

Notice that the tameness of each separatrix $\ell \in L(\omega)$ does not imply the tame property of the bunch $L(\omega)$. Such bunch is called mildly wild.

Debrunner-Fox example

So H. Debrunner and R. Fox in 1960 constructed an example of a wild collection of arcs in $\mathbb{R}^3$ where each arc is tame.

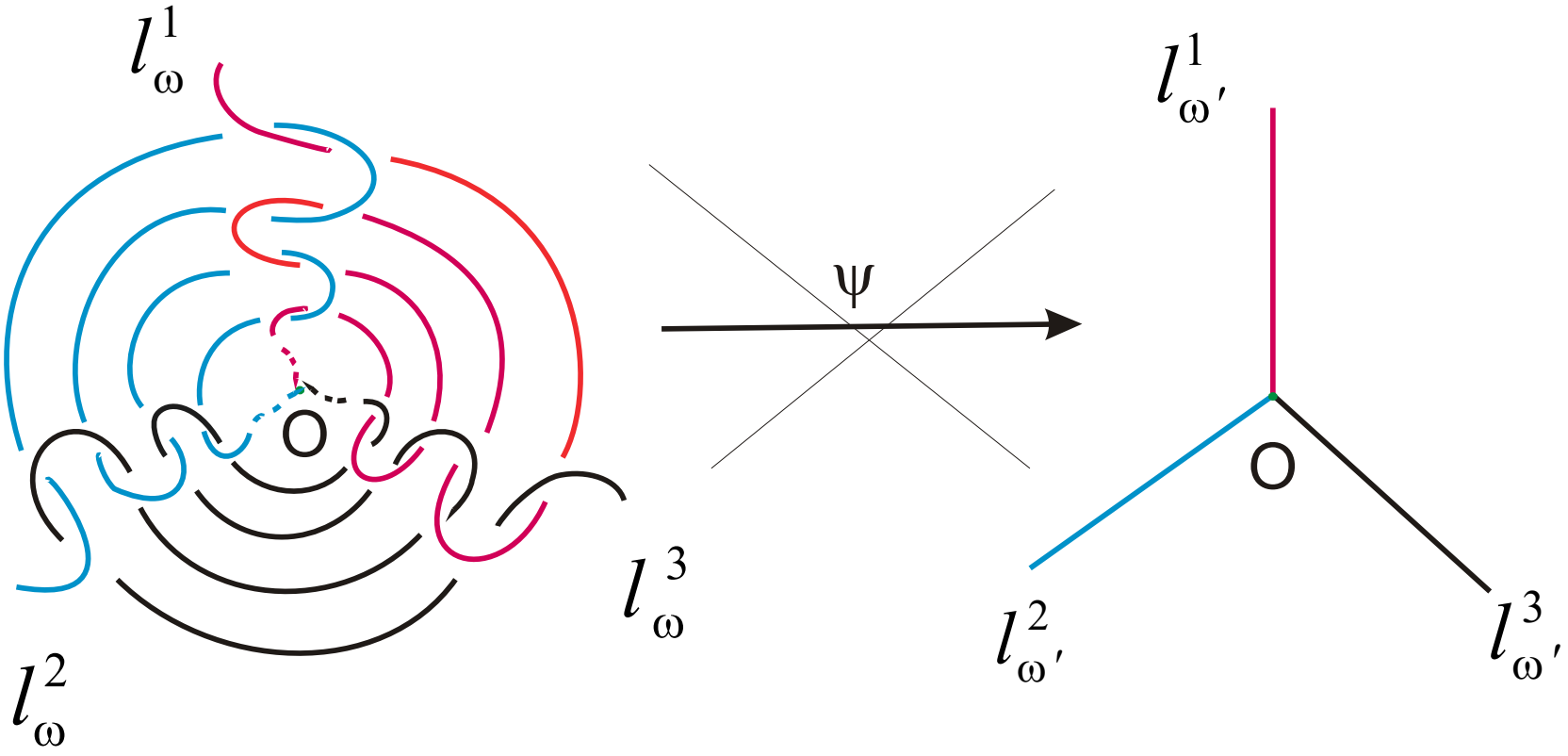

Mildly wild bunch in dynamics

Using this example and methods of realization of Morse-Smale diffeomorphisms it is possible to construct a gradient-like diffeomorphism on S^3 having mild wild bunch $L(\omega)$ (O. Pochinka).

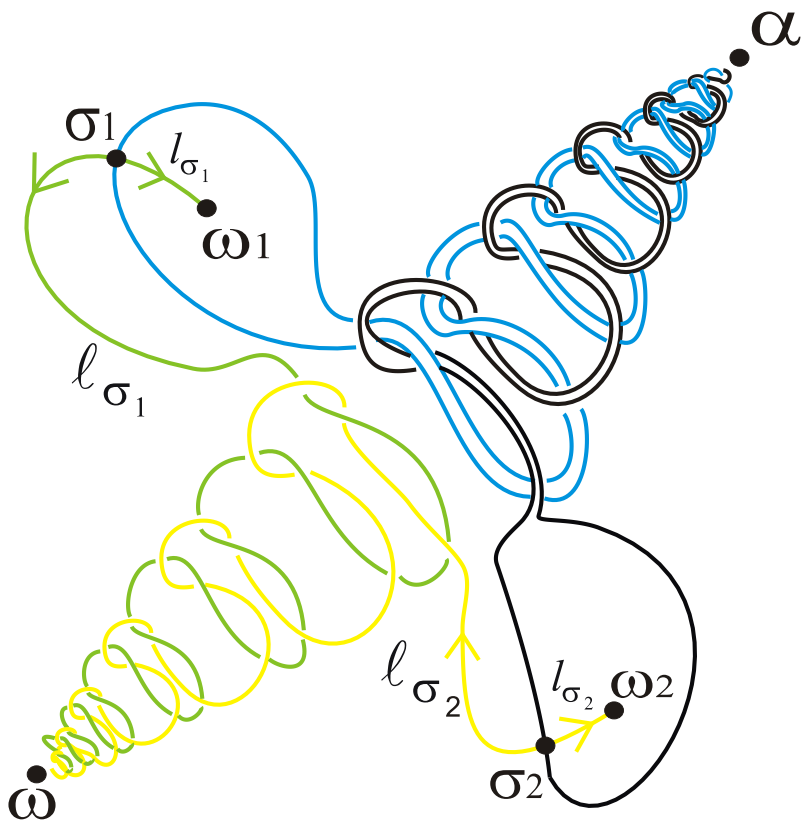

Global dynamic of gradient-like diffeomorphism. One-dimentional attractor and repeller

Let f be a Morse-Smale diffeomorphism on 3-manifold. Let us denote by Ω^+ (Ω^-) the set of all sinks (sources), by Σ^+ (Σ^-) the set of all saddle points having one-dimensional unstable (stable) invariant manifolds, by L^+ (L^-) the union of the unstable (stable) one-dimensional separatrices.

We set $\mathcal{A} = \Omega^+ \cup L^+ \cup \Sigma^+$, $\mathcal{R} = \Omega^- \cup L^- \cup \Sigma^-$. It is possible to prove that $\mathcal{A}$ ($\mathcal{R}$) is a connected set which is an attractor (a repeller) of f. Then $g = \frac{|\Sigma^+ \cup \Sigma^-| - |\Omega^+ \cup \Omega^-| + 2}{2}$, where $|.|$ stands for the cardinality.

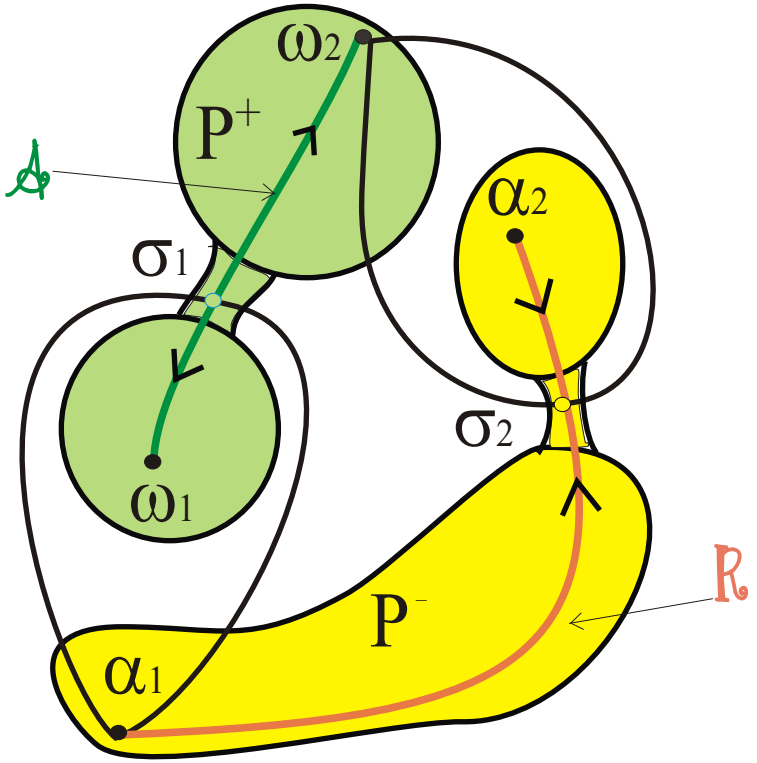

Number haracteristic for one-dimentional attractor and repeller

Set $g^+ = |\Sigma^+| - |\Omega^+| + 1$ and $g^- = |\Sigma^-| - |\Omega^-| + 1$.

Statement

For any Morse-Smale diffeomorphism $f : M^3 \to M^3$

$$g^+ = g^- = g.$$

Step 1. According to M. Shub and D. Sullivan, a Morse-Smale diffeomorphism induces in all homology groups isomorphisms whose eigenvalues are roots of unity. Thus there is an integer k such that f^k leaves $Per(f^k)$ fixed, $f^k|_{W^u(p)}$ preserves the orientation of $W^u(p)$ for any point $p \in Per(f^k)$ and 1 is the only eigenvalue of the isomorphism induced by f^k on homology.

Number characteristic for one-dimensional attractor and repeller

Step 2. Applying the Lefschetz formula to f^k yields

$$\sum_{p \in Per(f^k)} (-1)^{dim\ W^u(p)} = \sum_{i=0}^{3} (-1)^i t_i,$$

where t_i is the trace of the map induced by f^k on the i-th homology group $H_i(M, \mathbb{R})$. By assumption on k, t_i coincides with the i-th Betti number and the alternating sum of the t_i's is the Euler characteristic, which is 0 for M^3. So we get $|\Omega^+| - |\Sigma^+| + |\Sigma^-| - |\Omega^-| = 0$, hence $|\Sigma^-| - |\Omega^-| = |\Sigma^+| - |\Omega^+|$, that is $g^+ = g^-$. As $g^+ = |\Sigma^+| - |\Omega^+| + 1$, $g^- = |\Sigma^-| - |\Omega^-| + 1$ then $g^+ + g^- = |\Sigma^+| - |\Omega^+| + 1 + |\Sigma^-| - |\Omega^-| + 1 = k - l + 2 = 2g$. Then we get $g^+ = g^- = g$.

Neighborhoods of attractor and repeller

Theorem

There is a neighborhood P^+ (P^-) of the set $\mathcal{A}$ ($\mathcal{R}$) such that:

1. P^+ *(resp.* P^-*) is a* f*-compressed (resp.* f^{-1}*-compressed) handlebody of genus* g *and* $\mathcal{A} \subset P^+$ *(resp.* $\mathcal{R} \subset P^-$*);*
2. $W^s(\sigma^+) \cap P^+$ *(resp.* $W^u(\sigma^-) \cap P^-$*) consists of exactly one two-dimensional closed disk for each saddle point* $\sigma^+ \in \Sigma^+$ *(resp.* $\sigma^- \in \Sigma^-$*).*

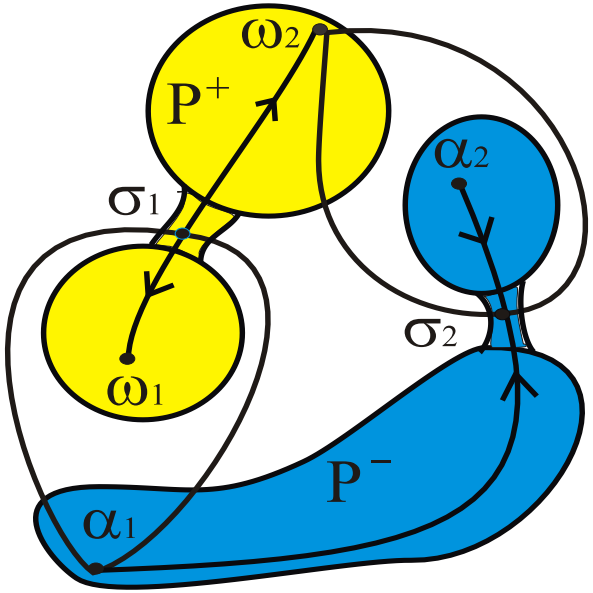

Construction of P^+ (P^-)

- It follows from suggestion that all bunches of one-dimensional separatrices L^+ are tame that there exists an f-compressed domain B^+, made of $|\Omega^+|$ balls, which is a neighborhood of Ω^+ and such that each separatrix $\ell \in L^+$ intersects ∂B^+ at unique point.
- Choose a tubular neighborhood H^+ of $L^+ \setminus int\, B^+$ such that $P^+ = B^+ \cup H^+$ is f-compressed. Then P^+ is a handlebody of genus g. Indeed, P^+ has homotopic type of cellular complex with $|\Omega^+|$ 0-cells and $|\Sigma^+|$ 1-cells. Then $\beta_0 - \beta_1 = |\Omega^+| - |\Sigma^+|$, where β_0, β_1 are the Betti numbers of P^+. Take account of that $\beta_0 = 1$ and β_1 is the genus of P^+, we get that genus of P^+ equals $|\Sigma^+| - |\Omega^+| + 1 = g^+ = g$.

Splitting lemma for product $S_g \times [0,1]$

Lemma

Let Q be an orientable surface with following properties:

- *Q is smoothly embedded to interior of manifold $H = S_g \times [0,1]$ where S_g is orientable surface of genus g;*
- *Q does not bound an open domain.*

Then the closer of each component of the set $H \setminus Q$ is homeomorphic to H.

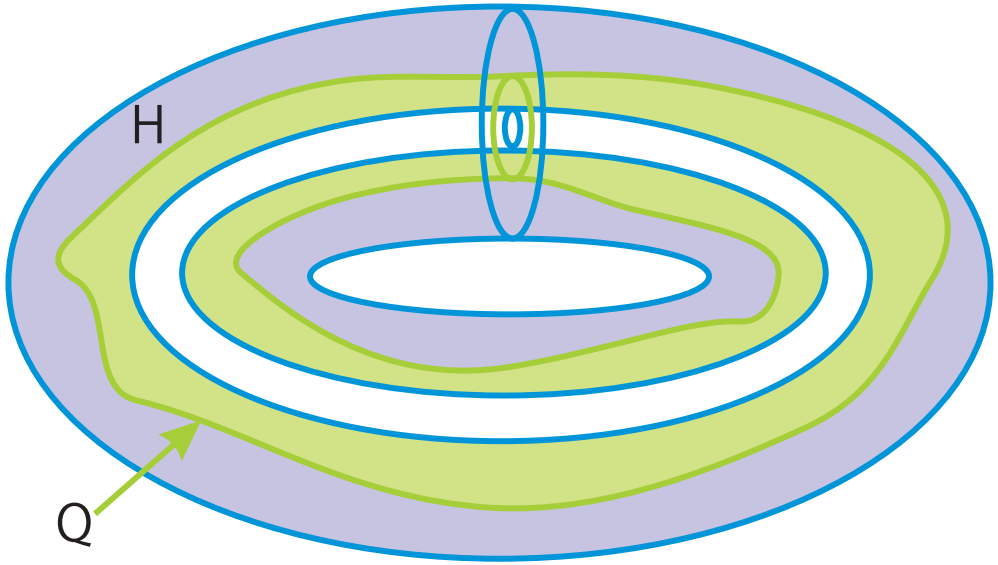

Construction of Heegaard splitting of genus g

- Denote by S^+ (S^-) the boundary of handlebody P^+ (P^-). It follows from above that S^+ and S^- are smooth orientable closed surfaces of genus g.
- As the sets $L(\omega)$, $L(\alpha)$ are tame for any $\omega, \alpha \in \Omega(f)$ then both sets $P^+ \setminus \mathcal{A}$, $P^- \setminus \mathcal{R}$ are homeomorphic to the product $S_g \times (0, 1]$ where S_g is orientable surface of genus g.

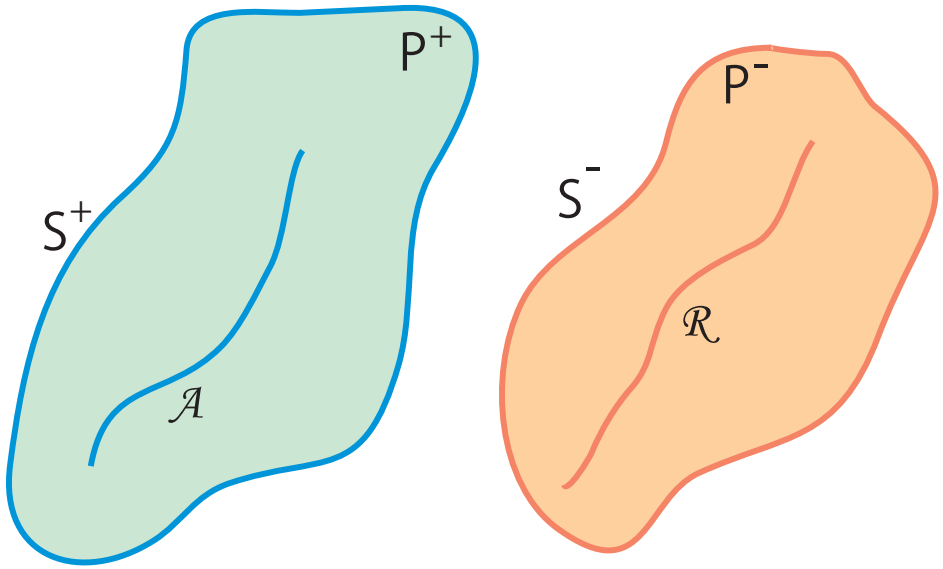

Construction of Heegaard splitting of genus g

- Choose a number $N > 0$ such that $f^N(S^-) \subset int\ P^+$ and put $S_N^- = f^N(S^-)$.

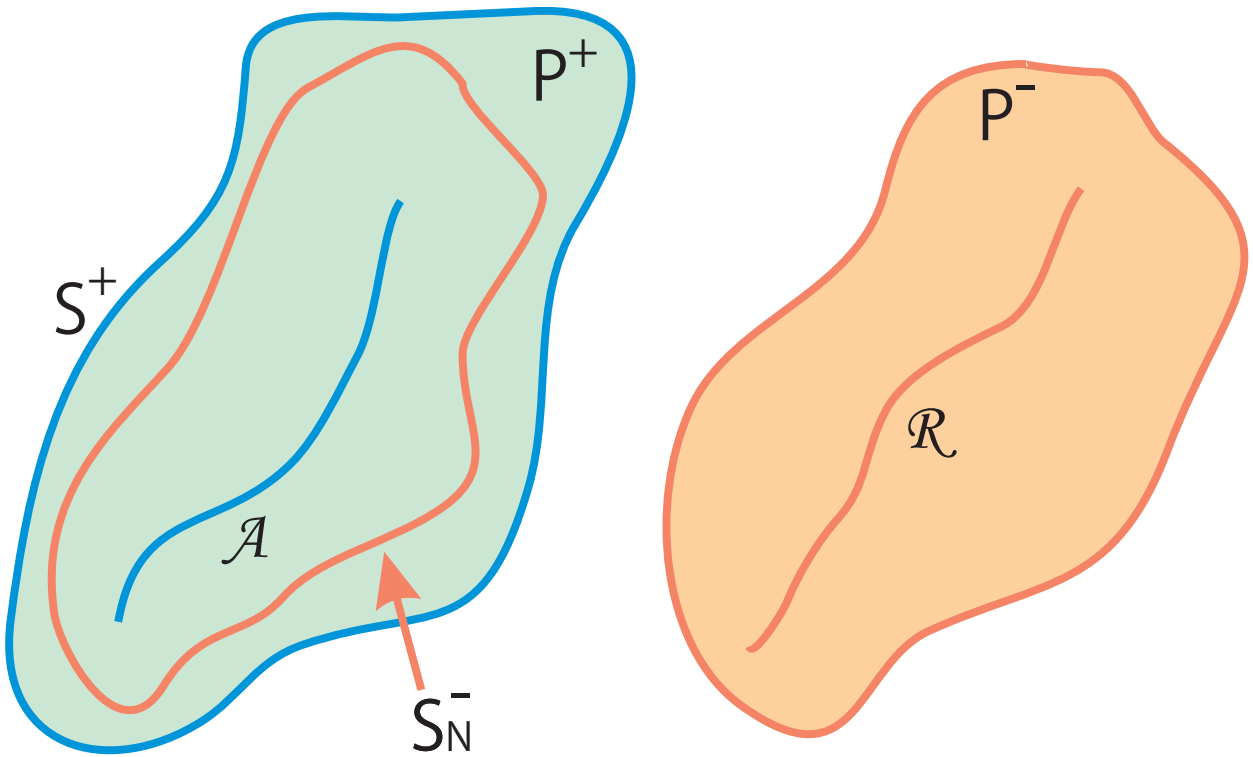

Construction of Heegaard splitting of genus g

- Choose a surface $S_N^+ \subset P^+ \setminus \mathcal{A}$ such that:
  1. S_N^+ is leaf which appropriates to some value $t_N \in (0,1)$ in the product $S_g \times (0,1]$.
  2. S_N^- belongs to the interior of closed domain which is homeomorphic to the product $S_g \times [0,1]$ and bounded by S_N^+ and S^+.

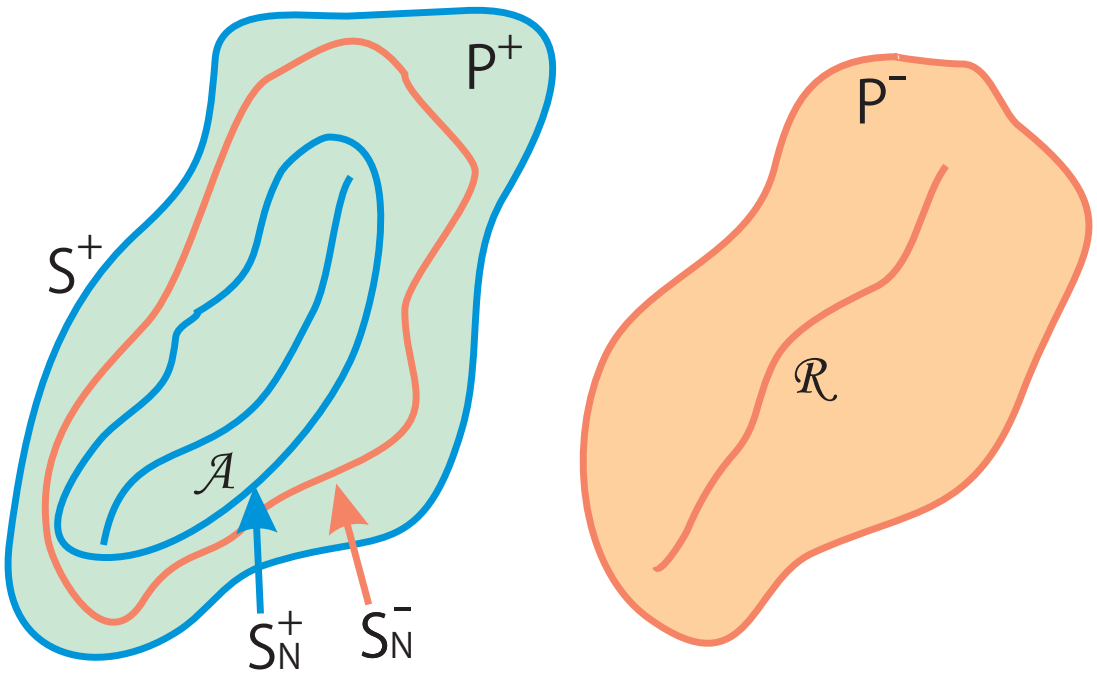

Construction of Heegaard splitting of genus g

- By splitting lemma the closed set bounded by S_N^+ and S_N^- also is homeomorphic to the product $S_g \times [0,1]$.
- Then the closed set M_N^+ (M_N^-) which contains the attractor $\mathcal{A}$ (the repeller $\mathcal{R}$) and bounded by surface S_N^- is a handlebody of genus g.
- Consequently $M^3 = M_N^+ \cup M_N^-$ is a Heeagaard splitting of genus g.

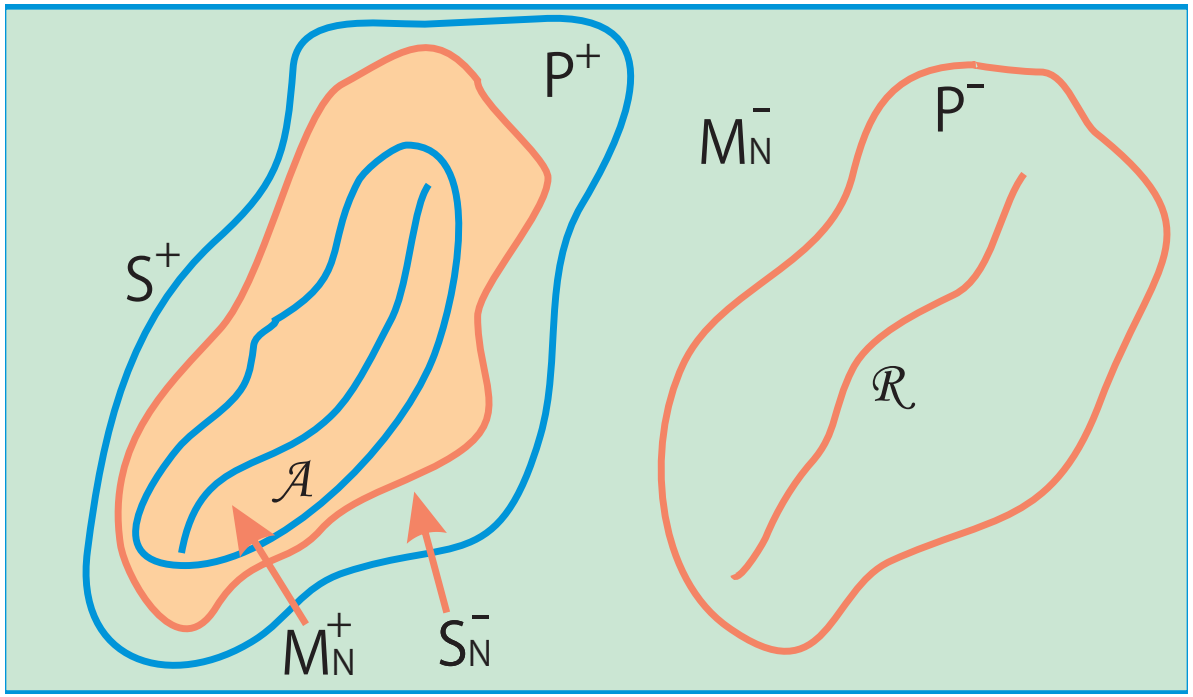

The results was obtained in collaboration with Ch. Bonatti, V. Grines, V. Medvedev, E. Pécou, O. Pochinka, E. Zhuzoma

1. Ch. Bonatti, V.Grines, V. Medvedev, E. Pécou. Three-manifolds admitting Morse-Smale diffeomorphisms without heteroclinic curves. Topology and its Applications. No 111 (2002), 335–344.
2. V. Grines, V. Medvedev, E.V., Zhuzhoma. New relations for Morse-Smale system with trivially embedded one-dimensional separatrises. Sbornik: Mathematics, 194:7, (2003) ,979–1007.
3. V. Grines, T. Medvedev, O. Pochinka, E. Zhuzhoma. On heteroclinic separators of magnetic fields in electrically conducting fluids, Physica D: Nonlinear Phenomena. Vol. 294 (2015), 1-5.
4. V. Grines, O. Pochinka. Morse-Smale cascades on 3-manifolds. Russian Mathematical Surveys, 68(1) (2013), 117-173.